1

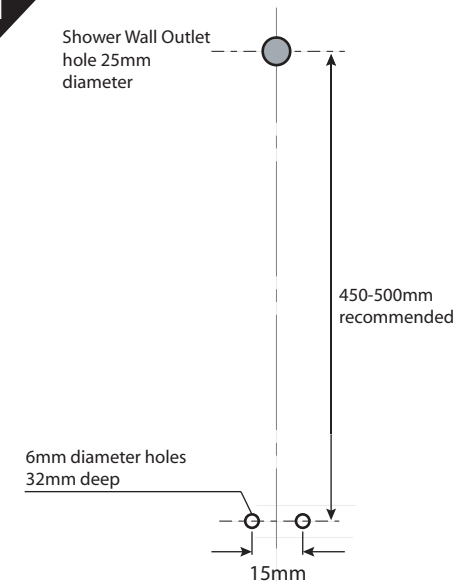

2

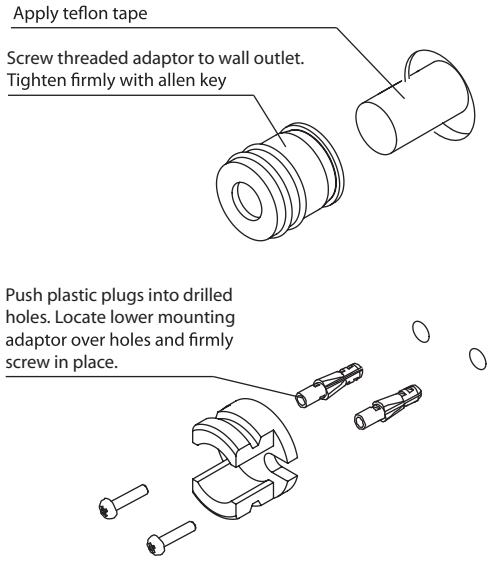

3

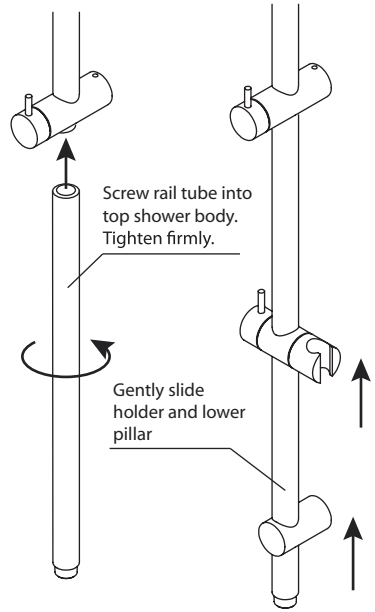

4

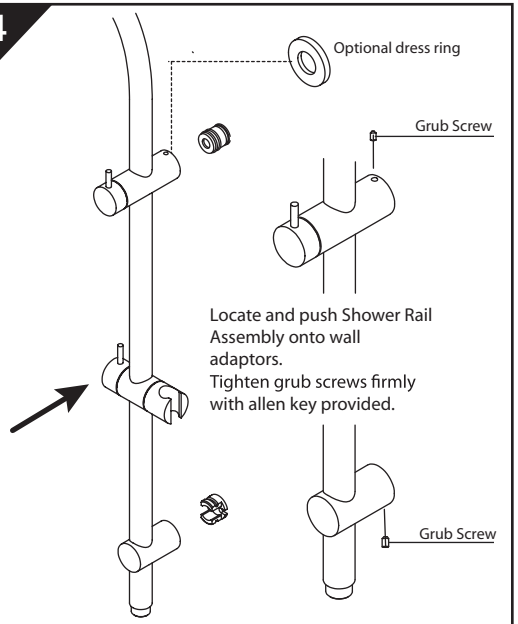

5

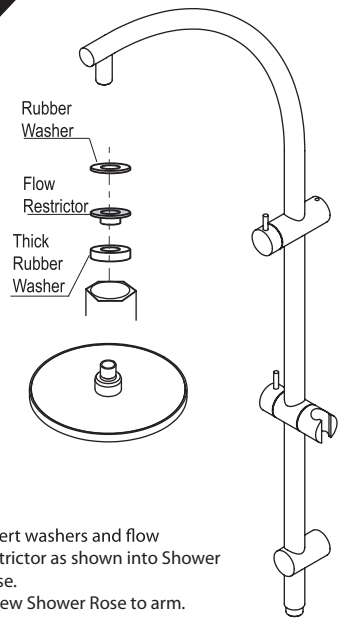

6

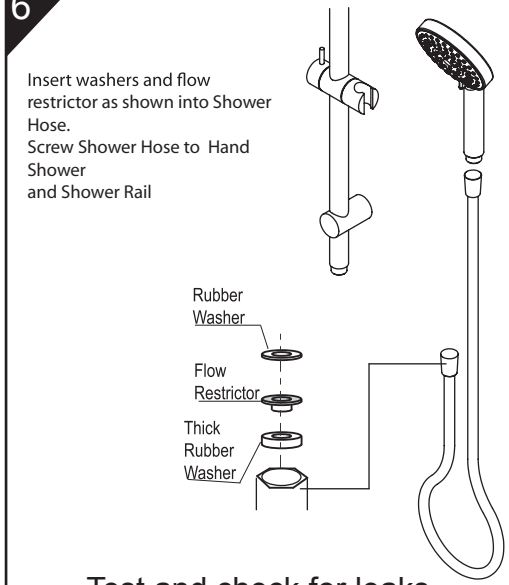

Test and check for leaks

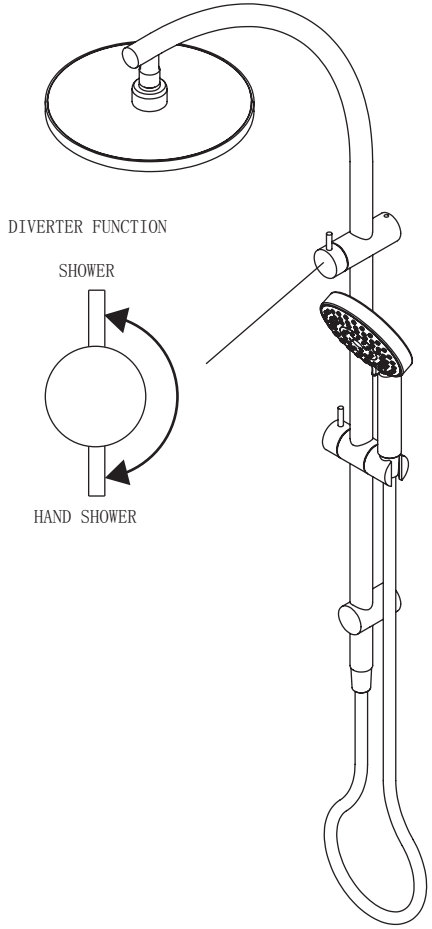

Maintenance and Care

Chrome plated surfaces should be cleaned with mild liquid detergent or soap and water. Do not use cream cleaners, as they are abrasive.

Use of unsuitable cleaning agents may damage the surface. Any damage caused in this way will not be covered by warranty.